Thoracolumbar fixation with dual opening pedicle screws and hooks

USS™ Small Stature / Paediatric Spine System

Surgical Technique

DePuy Synthes

PART OF THE Johnson & Johnson FAMILY OF COMPANIES

Image intensifier control

This description alone does not provide sufficient background for direct use of DePuy Synthes products. Instruction by a surgeon experienced in handling these products is highly recommended.

Processing, Reprocessing, Care and Maintenance
For general guidelines, function control and dismantling of multi-part instruments, as well as processing guidelines for implants, please contact your local sales representative or refer to:
http://emea.depuysynthes.com/hcp/reprocessing-care-maintenance
For general information about reprocessing, care and maintenance of Synthes reusable devices, instrument trays and cases, as well as processing of Synthes non-sterile implants, please consult the Important Information leaflet (SE_023827) or refer to:
http://emea.depuysynthes.com/hcp/reprocessing-care-maintenance

Table of Contents

For product catalog contact your local DePuy Synthes representative.

AO Spine Principles

The four principles to be considered as the foundation for proper spine patient management underpin the design and delivery of the Curriculum: Stability – Alignment – Biology – Function.[1,2]

Stability
Stabilization to achieve a specific therapeutic outcome

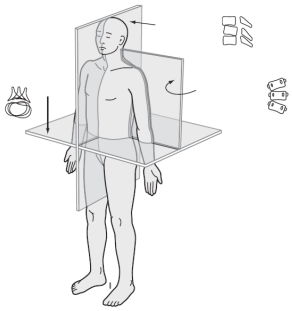

Alignment
Balancing the spine in three dimensions

Biology
Etiology, pathogenesis, neural protection, and tissue healing

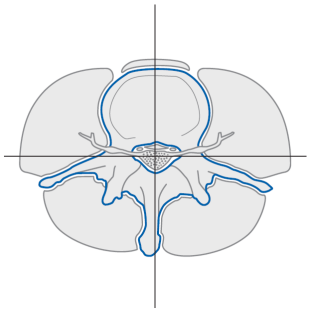

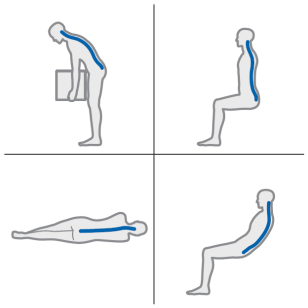

Function
Preservations and restoration of function to prevent disability

Handling the Implants with a Stick

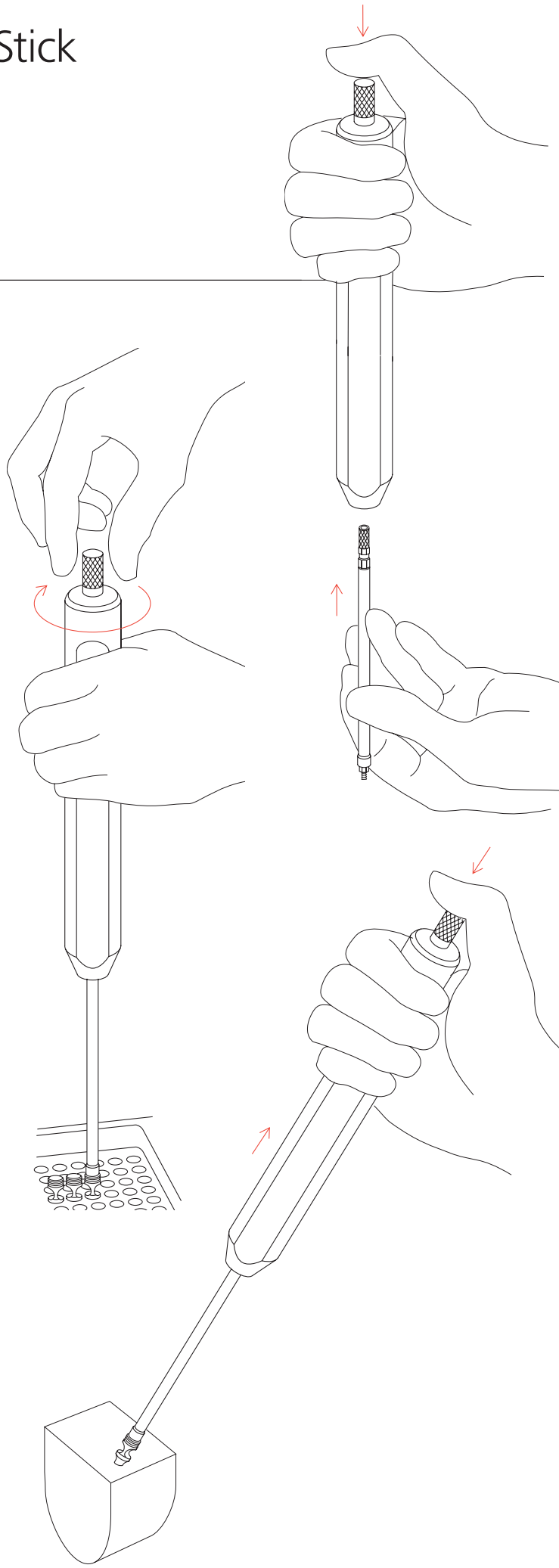

The dual-opening pedicle screws have the same head as the pedicle, lamina and angled hooks. The following handling instructions hence refer to both the pedicle screws and all three hook types (termed "implants" in the following).

1. Attach handle to stick

Press the knurled release button on the upper end of the handle (388.622), and simultaneously attach the hook and screw holder with hexagonal 4.0 mm (388.612) (also termed the "stick") to the handle.

2. Pick up implant

Pick up the dual-opening implant with the stick and handle by rotating the release button on the handle.

3. Release handle from stick

Insert the implant. To release the handle from the stick, press the release button on the handle.

Insert Pedicle Screws (Posterior Approach)

1. Open pedicle and determine screw length

Use one of the pedicle awls (1) (388.551 for screws Ø 4.2 mm, 388.550 for larger screws) to open the cortex of the pedicle to a depth of 10 mm. Continue opening the pedicle using one of the pedicle probes (2) with markings at 30, 40 and 50 mm.

- 388.538 for Ø 4.2 mm screws;
- 388.540 for Ø 5.0 and 6.0 mm screws;
- 388.539 for Ø 7.0 mm screws.

Determine the length of the pedicle screws with the depth gauge for pedicle screws (357.789).

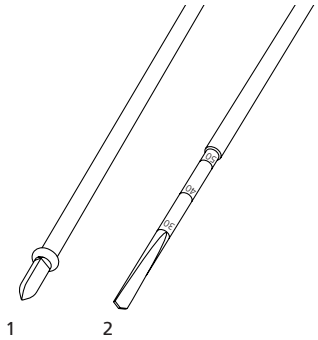

2. Probe pedicle channel

Using the straight feeler Ø 2.3 mm (388.545) or the curved feeler Ø 2.3 mm (388.546), probe the pedicle screw channel in order to check for perforations in the walls.

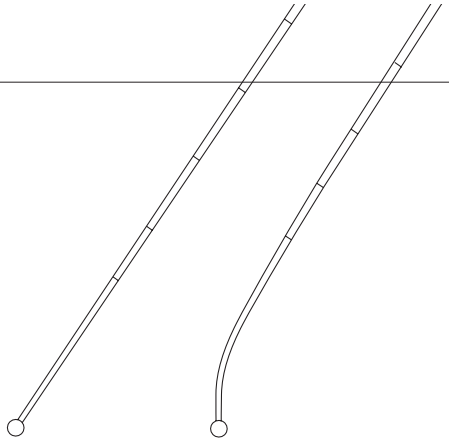

3. Insert pedicle screw into pedicle

Pick up the pedicle screw as described on page 3.

Insert the pedicle screw into the prepared pedicle until the screw head is well seated and one of the openings points towards the rod that is to be subsequently inserted (1). To disconnect the stick from the handle, press the release button on the handle (2).

Note: **If using a rod connector, align the screw head such that one of the openings is perpendicular to the rod.**

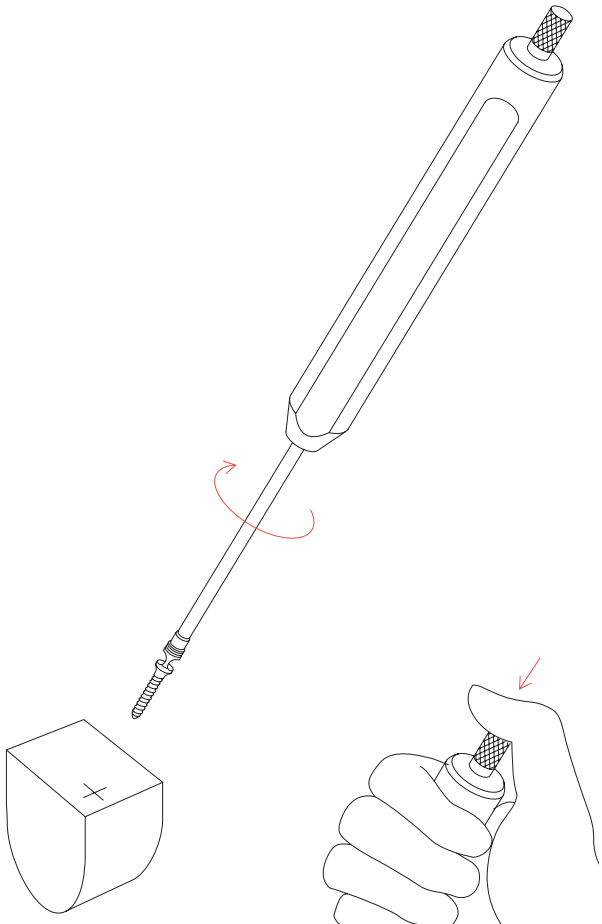

1

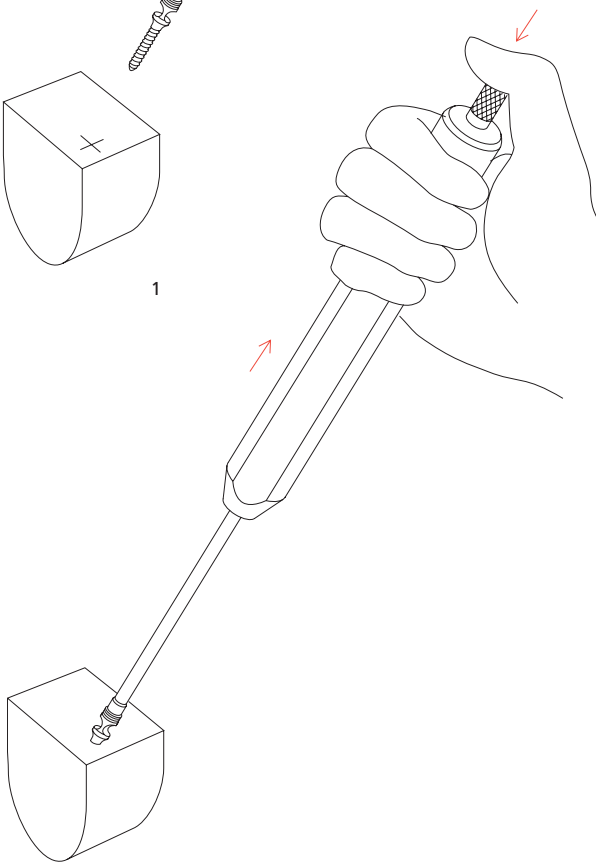

2

Insert Pedicle Screws with Washers (Only for Anterior Approach)

Flat (1) and angled (2) washers can be used with anterior fixation constructs to distribute the force of the screw over the bone. The angled washers form a fixed angle with the screw.

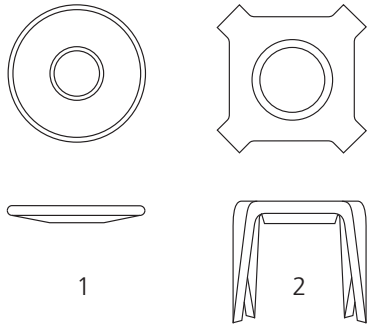

1. Prepare screw hole and determine screw length

Determine the entry point for the screw, preferably at the junction of the pedicle and the vertebral body.

Align the pedicle awl (1) (388.550 or 388.551) perpendicular to the contralateral side, and prepare the screw hole. Enlarge the screw hole using the pedicle probe (2) (388.538, 388.539 or 388.540) until it penetrates the contralateral cortex.

Determine the length of the pedicle screw using the depth gauge for pedicle screw (357.789) (3).

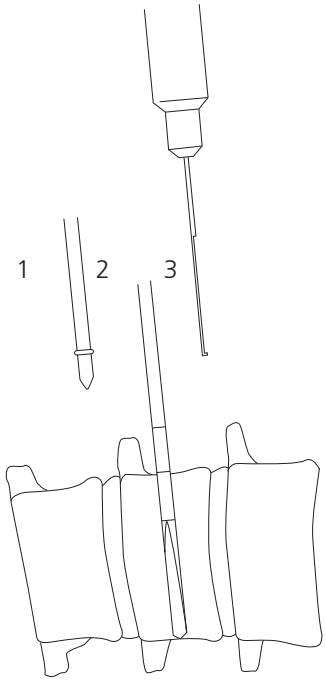

2a. Insert flat washer and screw

Place a flat washer with the convex side facing down onto the concavity of the vertebral body.

Pick up a dual-opening pedicle screw as described on page 3. Insert the pedicle screw into the prepared vertebral body until the screw head is well seated. To release the stick from the handle, press the release button on the handle.

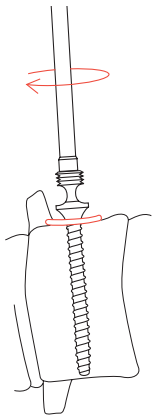

2b. Insert angled washer and screw

While pressing the release button, load an angled washer in the inserter (385.807) (1). Anchor the washer in the bone by gently tapping the inserter (2).

Once the washer is firmly seated, remove the inserter by pressing the release button (3). Pick up a dual-opening pedicle screw as described on page 4. Insert the pedicle screw into the prepared vertebral body until the screw head is well seated (4). To disconnect the stick from the handle, press the release button on the handle.

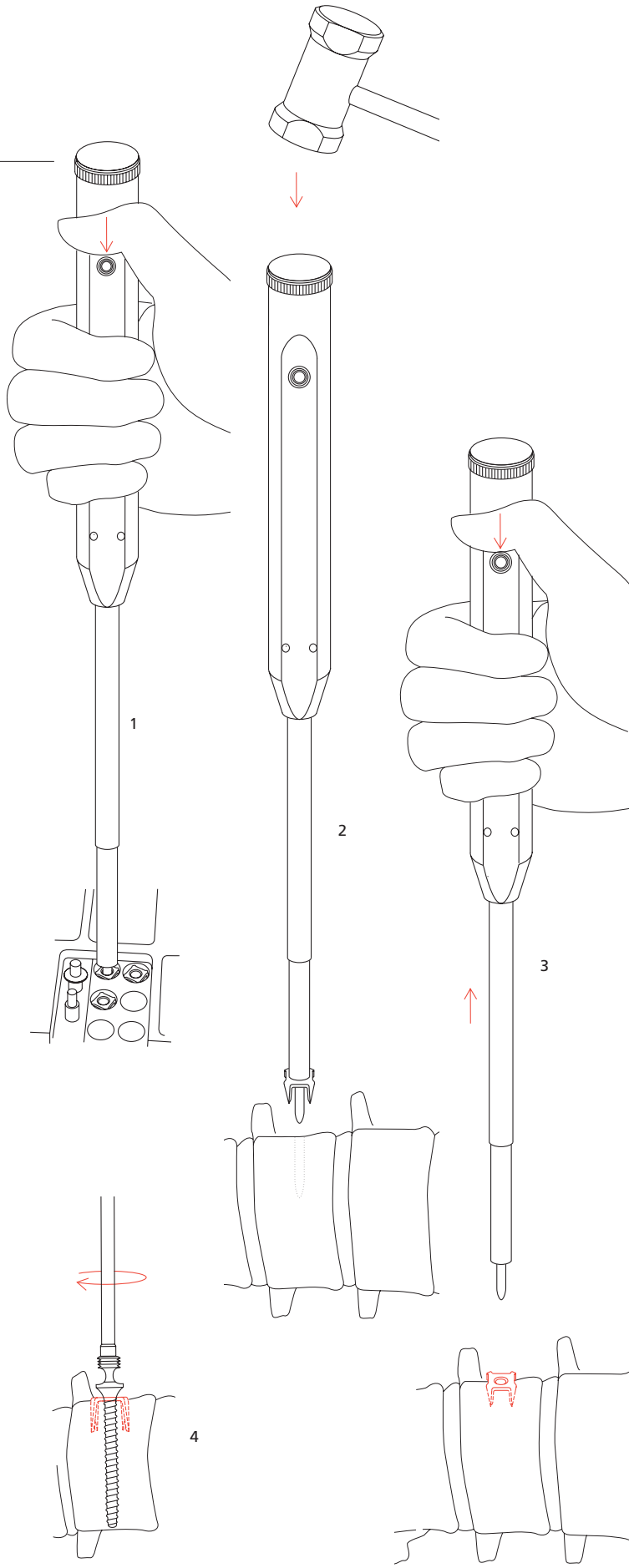

Position Pedicle Hook

The USS Small Stature/Paediatric Pedicle Hooks can be anchored in the pedicle with a single Ø 3.2 mm USS Screw for Pedicle Hook.

1. Prepare seat for pedicle hook

Prepare the pedicle using the pedicle feeler (388.511) (1). Place the pedicle feeler between the inferior and superior facet joints.

Precaution: **Ensure that the feeler is placed in the articular space and not in the bone of the inferior facet.**

To facilitate the insertion of the pedicle hook, remove a small portion of the inferior facet with an osteotome (2). The pedicle feeler has a mark. As soon as the mark is reached, sufficient bone has been removed to accommodate the hook around the pedicle.

Check the optimal position of the pedicle feeler by moving it laterally and cranially (3).

Precaution: **Do not push medially.**

Remove the pedicle feeler.

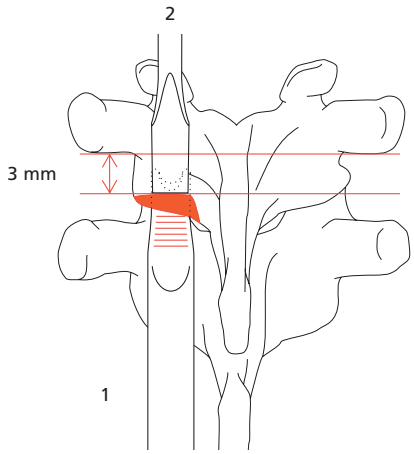

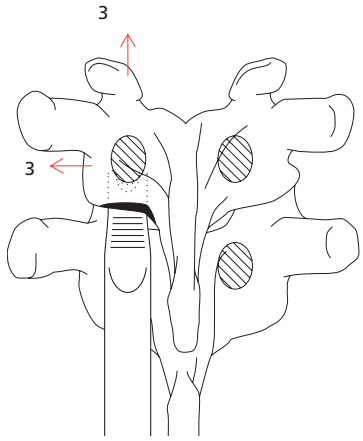

Position Pedicle Hook

2. Position pedicle hook

Using the stick, pick up a pedicle hook from the set, as described on page 4.

Note: **Use a front-opening hook if a rod connector is needed.**

Insert the hook positioner (388.631) into the positioning hole of the hook, and ease the pedicle hook into the previously prepared seat. Ensure that the pedicle hook is snug around the pedicle by pushing the hook positioner axially and laterally. The pedicle hook should not move. Gently tap the hook positioner with a hammer to firmly seat the hook.

Remove the hook positioner and the handle. The stick remains attached to the hook.

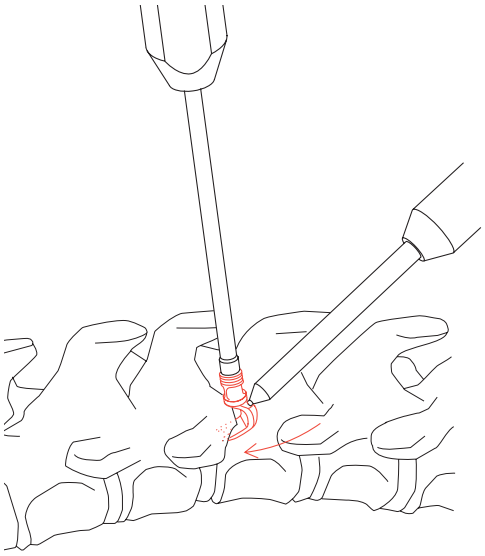

3. Drill hole for screw Ø 3.2 mm

To anchor the pedicle hook to the pedicle, a screw Ø 3.2 mm can be inserted through the hole at the back of the hook.

Use a three-fluted drill bit Ø 2.0 mm (315.190) together with the USS drill sleeve 2.0 and an oscillating drill to drill the screw hole. The drill sleeve consists of two components, the drill sleeve (388.581) and the handle (387.060). These two components must be screwed together before use.

Warning: **Do not start the power drill if the bit does not hit bone after passing through the drill sleeve.**

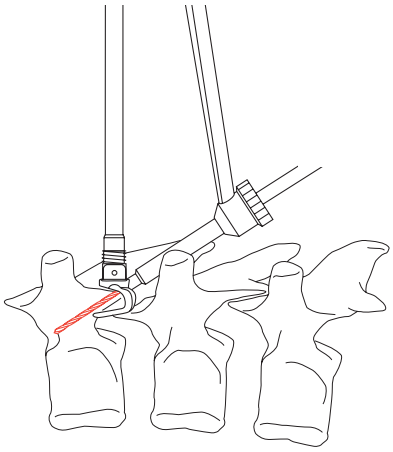

4. Determine screw length

Remove the drill sleeve and determine the depth with the depth gauge (319.060).

5. Insert Ø 3.2 mm screw

Pick up an appropriate length USS Screw for Pedicle Hook using the holding sleeve (388.381) and the hexagonal screwdriver (314.070), and insert the screw into the previously prepared drill hole. The pedicle hook is now attached to the pedicle.

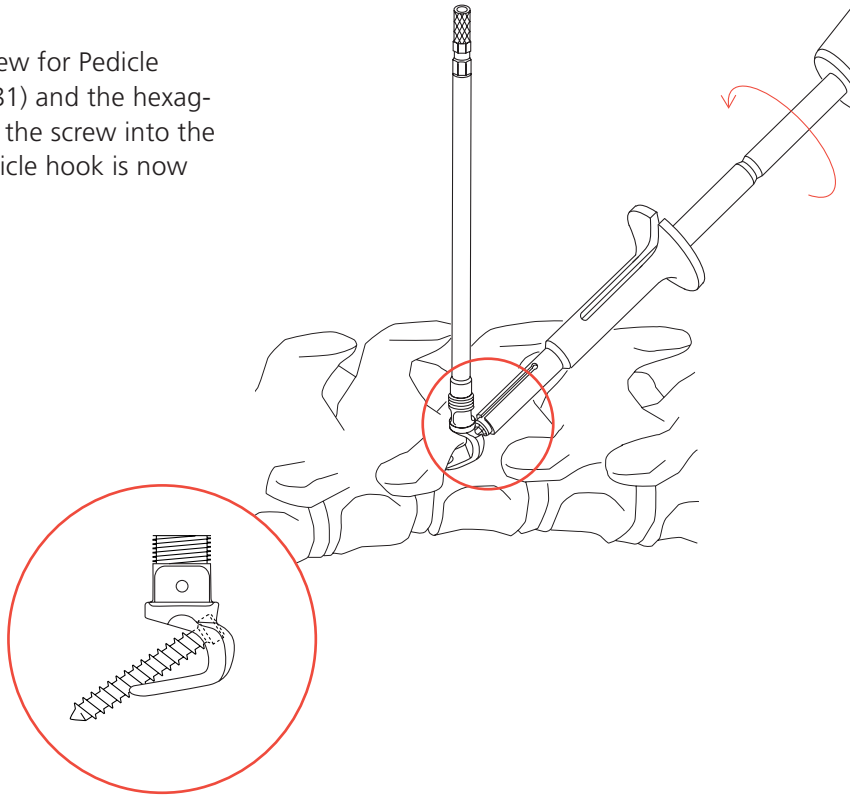

Position Lamina Hook

1. Prepare seat for lamina hook

The lamina hook can be placed around either the superior or inferior portion of the lamina. Prepare the seat for the lamina hook using the lamina feeler (388.521) (1 and 2). To ensure good seating of the hook, carefully remove the ligamentum flavum and a small portion of the lamina with a rongeur.

Remove the lamina feeler.

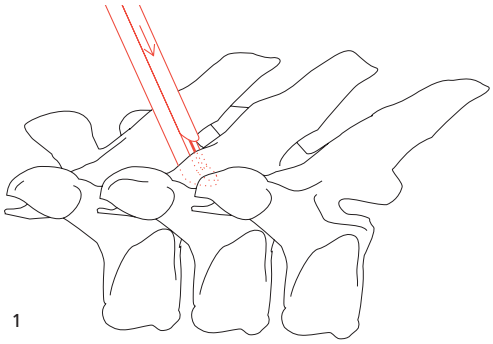

1

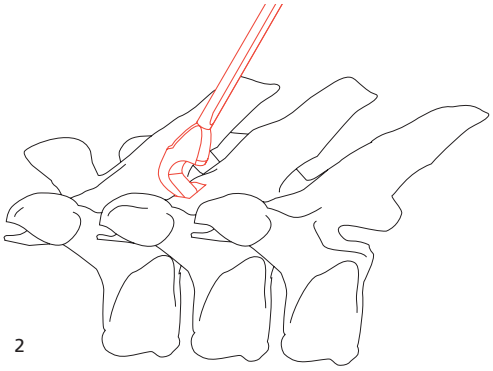

2

2. Position lamina hook

Using the stick, pick up an appropriate lamina hook from the set, as described on page 3.

Note: **Use a front-opening hook if a rod connector is needed.**

Insert the hook positioner (388.631) into the positioning hole of the hook, and ease the lamina hook into the previously prepared seat. The inferior part of the lamina hook must fit snugly with the lamina.

Precaution: **Ensure that the lamina hook does not lie too deep or press upon the bone marrow.**

Remove the hook positioner and the handle. The stick remains attached to the hook.

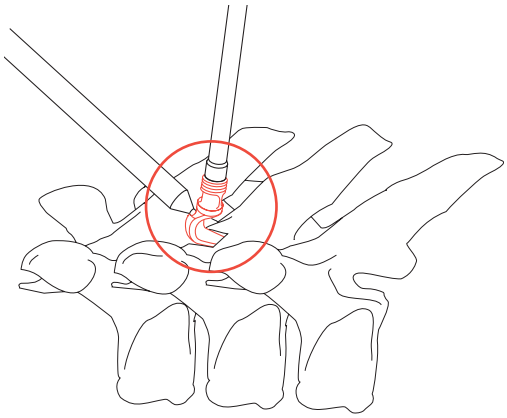

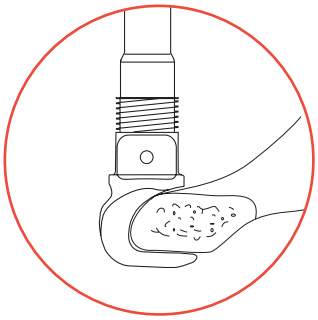

Angled Lamina Hook Positioning

1. Prepare seat for angled lamina hook

Remove the soft tissue from the transverse process. Place the lamina feeler (388.521) around the transverse process, elevating the soft tissue attachments from the anterior portion of the transverse process.

Remove the lamina feeler.

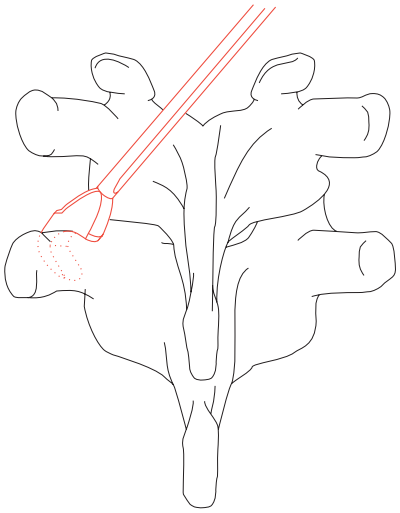

2. Angled lamina hook positioning

Using the stick, pick up an appropriate angled lamina hook from the set, as described on page 3.

Note: **Use a front-opening hook if a rod connector is needed.**

Insert the hook positioner (388.631) into the positioning hole of the hook, and ease the angled lamina hook into the previously prepared seat.

Remove the hook positioner and the handle. The stick remains attached to the hook.

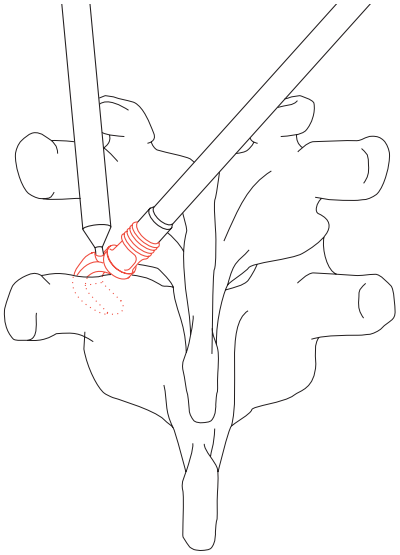

Rod Contouring

Use the bending template Ø 5.0 mm (388.906/907) to determine the proper rod contour and length.

Contour the rod using either the bending pliers with rolls for rods Ø 5.0 mm, with bending radius adjustment (1) (388.961), or the bending iron (2) (388.911, left, 388.922 right).

Warning: **Once bent, the titanium rods should not be bent back again. Do not bend titanium rods more than 45°.**

1

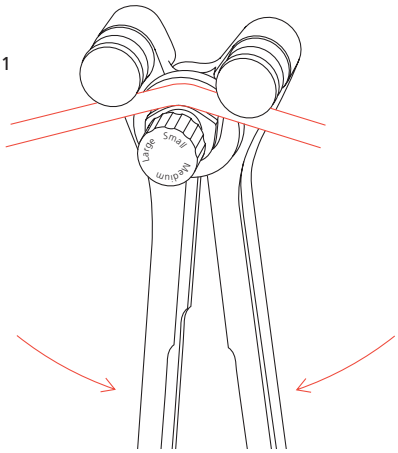

2

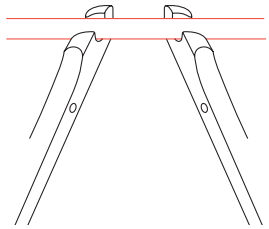

Note: **Hook/screw offset**

Anatomical conditions sometimes result in the implants not being aligned in a straight line. The screws and hooks have a 7.6mm offset and the dual opening allows for insertion of the rod to either side of the pedicle screws and hooks.

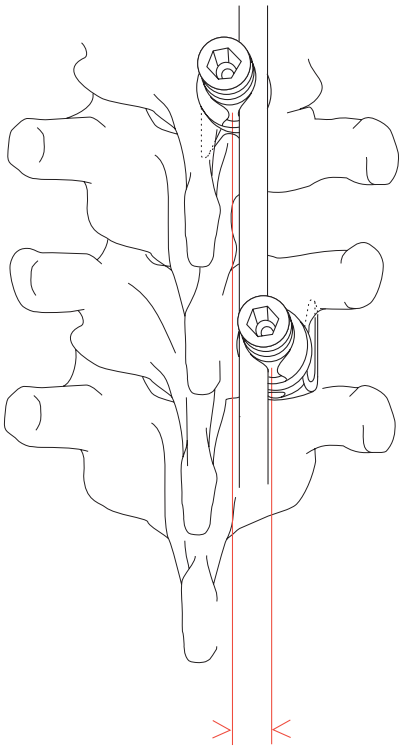

7,6 mm

Locking Implants to Rods

The rod Ø 5.0 mm is secured with a sleeve and nut.

1. Pick up and locate sleeve with sleeve positioner

Fit the sleeve pusher (388.582) to the sleeve positioner (388.583). Pick up a sleeve, ensuring that the shorter leg of the sleeve pusher stands above the narrow-fluted side of the sleeve. Slide the sleeve positioner over the stick and place it on the implant.

Press down on the sleeve pusher to place the sleeve on the implant/rod (1). Retract the sleeve pusher (2). The sleeve remains on the implant/rod.

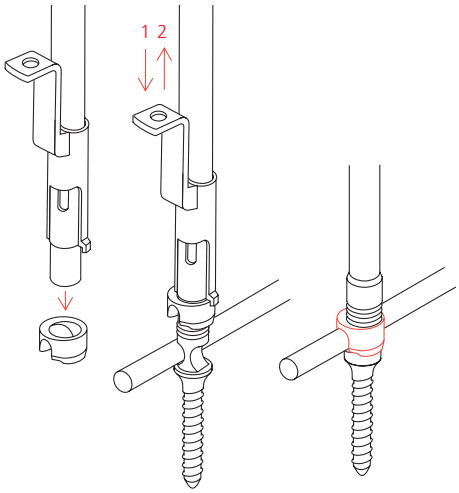

2. Place nut on implant

Pick up the nut from the loading station using the socket wrench for 12-point nut, with L-handle (388.584).

Introduce the socket wrench 5.0 mm with T-handle (388.143) into the socket wrench for 12-point nut and slide together over the stick. The socket wrench 5.0 mm must engage in the hexagon of the stick, which is used to apply counter torque.

If the stick has already been removed, insert the screw-driver 4.0 mm with T-Handle (388.338) into the socket wrench for 12-point nut and apply counter torque.

3. Tighten nut

Tighten the nut with the socket wrench for 12-point nut with L-handle. The instruments used for applying counter torque are spring-loaded and can be kept under constant pressure by means of the T-handle. To tighten the nut further, lift off the L-handle and place it on again.

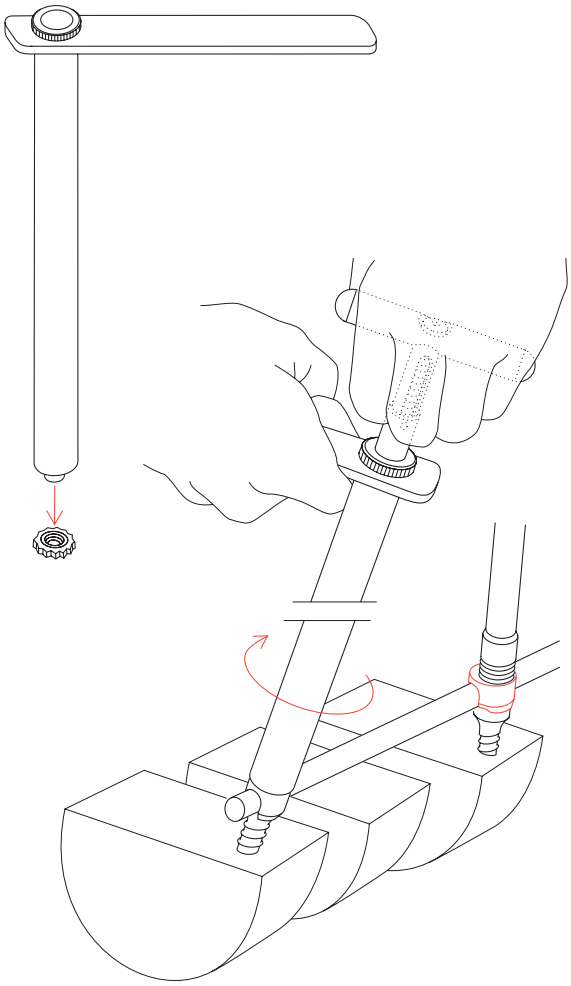

Introducing Rods into Dual-Opening Implants

Using the USS small stature/paediatric rod introduction pliers (the "persuader")

Occasionally, a rod cannot easily be introduced into a dual-opening implant because of the distance between the rod and the implant. When using the rod introduction pliers (388.503) (the persuader), the dual-opening implant can be lifted and pulled towards the rod.

1. Mount sleeve pusher onto persuader

Place the sleeve pusher (388.582) onto the cylinder of the persuader (1). Pick up a sleeve from the loading station using the sleeve pusher (2). The handle of the sleeve pusher must be located on the side of the persuader with the arrow.

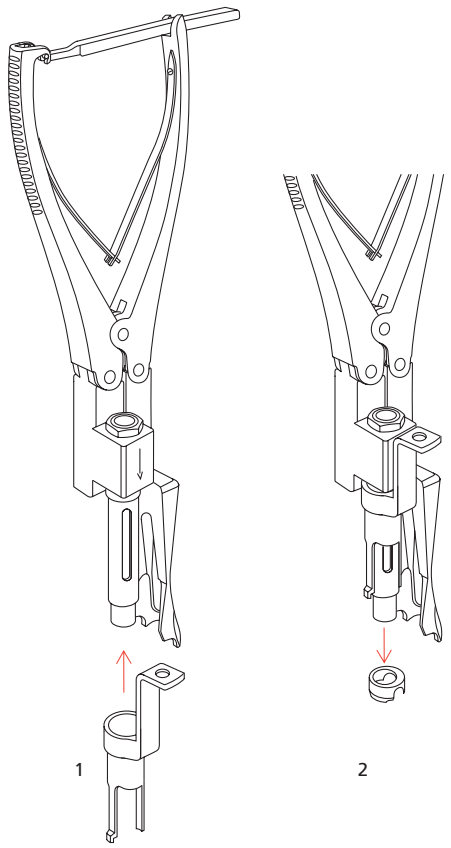

2. Place persuader on implants

Slide the cylinder of the persuader on the stick and the leg of the pliers on the rod.

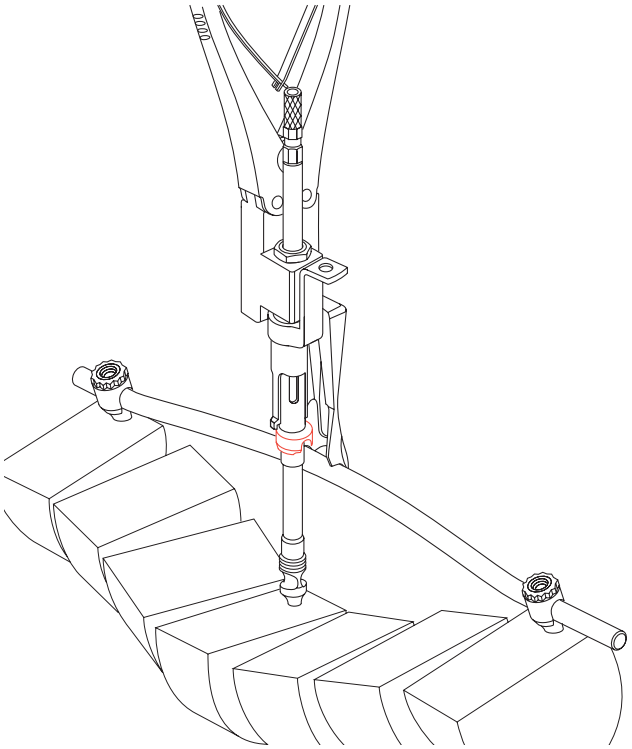

3. Attach support for rod introduction pliers

Slide the support for rod introduction pliers (388.615) over the protruding end of the stick, and simultaneously pull the lever (1). The forked opening of the support must face upwards (TOP). Release the lever so that the support engages in the hexagon of the stick (2). The support for rod introduction pliers serves as a locking device when lifting the implants and allows the implants to be rotated.

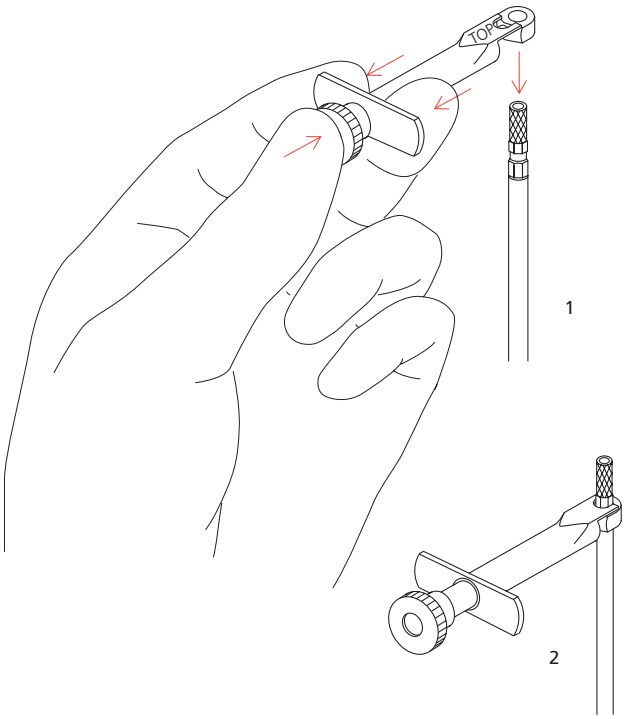

4. Bring rod towards dual-opening implant

Place the spreader forceps (388.413) on the stick between the support and the persuader. Slowly open the spreader to bring the implant up towards the rod. When the opening of the implant is at the height of the rod, close the persuader to engage the rod.

Precaution: **Carefully close the persuader since this instrument can exert considerable force. If necessary, the catch can be flipped up so that the persuader does not remain in the closed position.**

Remove the support for rod introduction pliers.

Warning: **Do not apply too much force on the anchorage of the implant or it will tear out of the bone.**

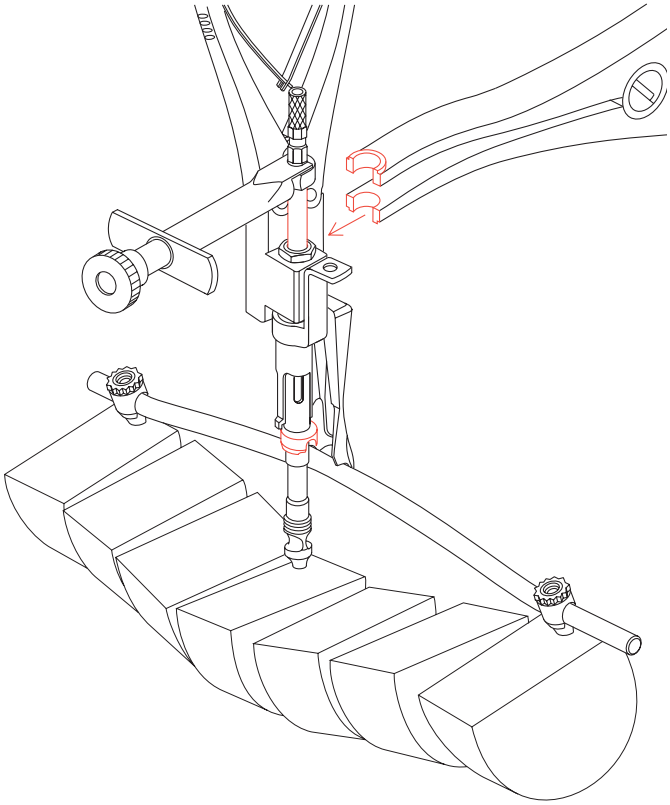

5. Place sleeve over implant and rod

Push the sleeve pusher down the cylinder to place the sleeve over the rod and implant (1). Retract the sleeve pusher (2). The sleeve remains on the implant/rod.

If the sleeve cannot be readily placed in position, tap the sleeve pusher gently to position the sleeve on the implant.

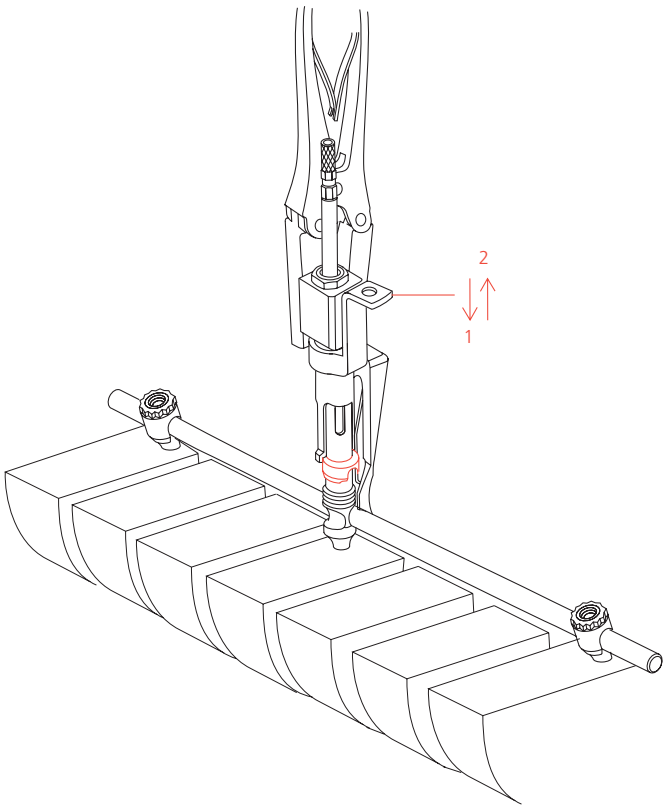

6. Attach implant to rod

Remove the persuader. Pick up a nut using the socket wrench for 12-point nut (as described on page 14), drop it over the stick and screw it loosely onto the implant.

Distraction or Compression of Adjacent Implants

Distraction or compression with corresponding forceps

Once the rod has been introduced and loosely attached to the implant, distraction or compression can be performed.

Before tightening the nut of the implant, use the spreader forceps (388.413) for distraction, or the compression forceps (388.424) for compression.

a. Option

Additional use of fixation ring

If the two implants are placed too far from each other, use the fixation ring for rods Ø 5.0 mm (498.909). Place the small hexagonal screwdriver (314.070) with the holding sleeve (388.360) onto the fixation ring, and place it next to the implant. Carry out distraction or compression. The implant-rod connection must be loose during this procedure.

Remove the fixation ring, and tighten the nut of the implant.

b. Option

Additional use of holding forceps for rods

Instead of using the fixation ring, secure the holding forceps for rods (388.441) next to an implant and carry out the distraction or compression.

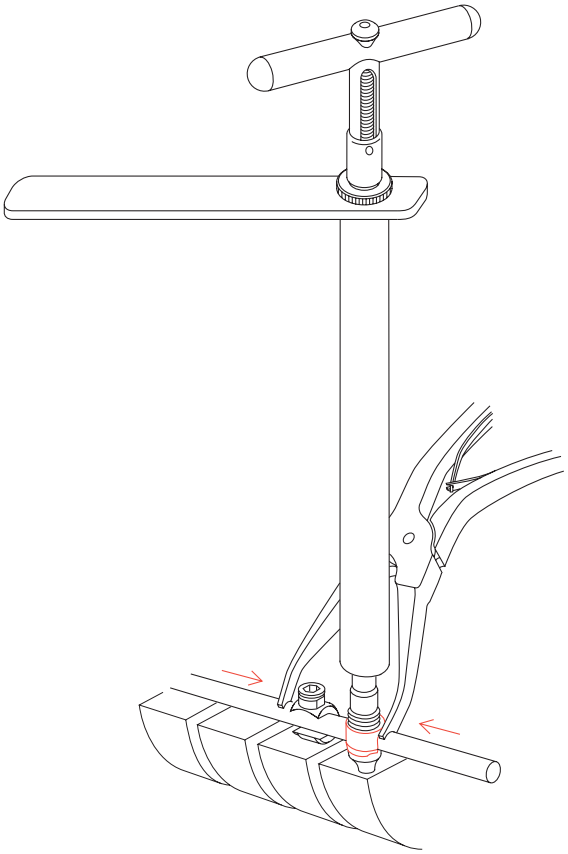

Connecting a Rod to an Implant with Rod Connectors

Rod connectors can be used to bridge distances between rod and implant in cases where this cannot be achieved with the persuader. All USS small stature/paediatric rod connectors are open and can be applied at any point during the operation. When using rod connectors, front-opening hooks must be used, or the pedicle screws must be rotated 90°.

1. Fasten rod connector to rod

Position the rod connector on the rod, and insert the ribbed part of the rod connector in the hook or the front-opening screw. Tighten the set screw of the rod connector using the small hexagonal screwdriver (314.070).

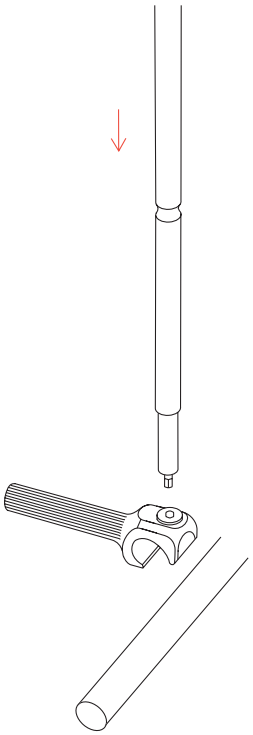

2. Connect rod connector to implant

Place the toothed sleeve (498.021) and the 12-point nut (498.022) onto the implant, and tighten the nut using the socket wrench for 12-point nut with L-handle (388.584), applying counter torque using the socket wrench 5.0 mm with T-handle (388.143) mounted on the stick.

Note: **Only use the toothed sleeve with rod connectors.**

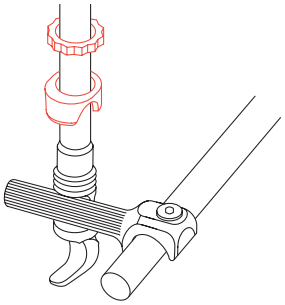

Connecting Two Rods with Cross-Link Connectors

Cross-link connectors are designed to connect the two longitudinal rods.

1. Assemble cross-link connectors

Outside the operating field, push the appropriate length of cross-link rod Ø 3.5 mm through the two cross-link clamps (1). One right and one left clamp (1a) or two identical clamps (1b) can be used depending on the space available in each case.

Alternative

If the distance between the two rods to be connected is less than 30 mm, one of the two cross-link clamps must be replaced by a cross-link clamp with rod (1c). Push the rod of the cross-link clamp with rod through the second cross-link clamp.

Do not tighten the set screws.

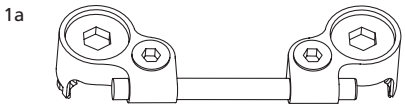

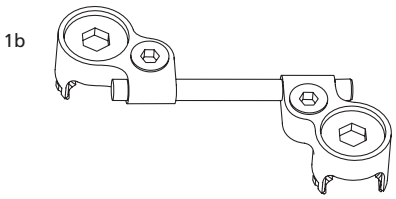

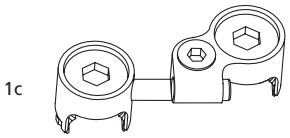

2. Mount cross-link connector

Click the assembled cross-link connector onto the rods Ø 5.0 mm (2a), ensuring that the set screws are completely unscrewed.

The cross-link rod Ø 3.5 mm can be angled by up to ±15° (2b).

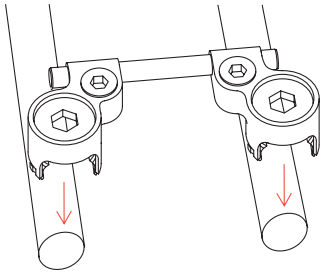

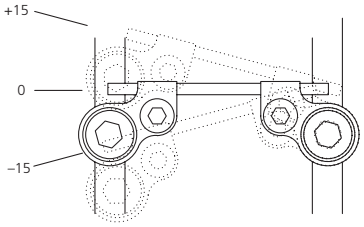

3. Secure cross-link connector

First, tighten the set screws for the rods Ø 5.0 mm on both cross-link clamps using the screwdriver Ø 4.0 mm with T-handle (388.338) (1). Next, tighten both set screws for the cross-link rod Ø 3.5 mm using the hexagonal screwdriver 2.5 mm (314.070) (2).

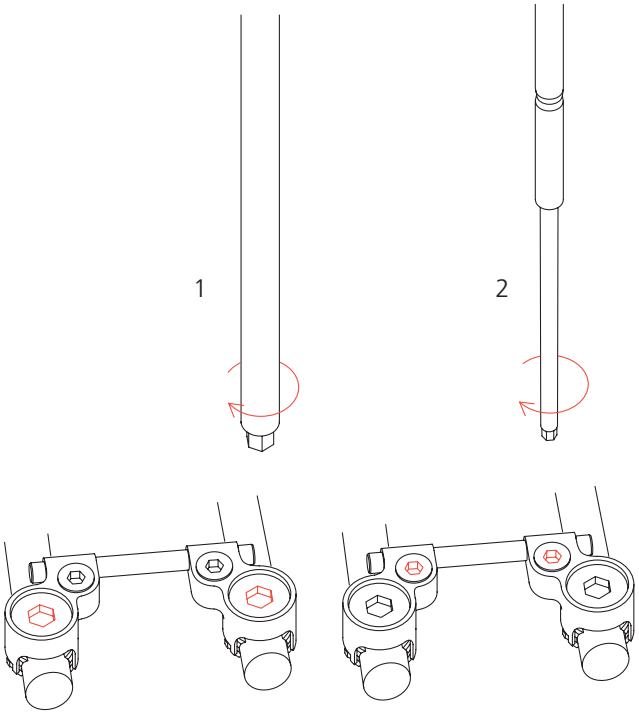

4. Distract cross-link assembly (optional)

Loosen one of the set screws with the small hexagonal screwdriver, and perform distraction with the spreader forceps (388.413). Retighten the set screws.

Indications and Contraindications

Please refer to the corresponding Instructions for Use for specific information on Intended use, Indications, Contraindications, Warnings and Precautions, Potential Adverse Events, Undesirable Side Effects and Residual Risks. Instructions for Use are available at www.e-ifu.com and/or www.depuysynthes.com/ifu

Bibliography

1. Aebi M, JS Thalgott, JK Webb. (1998). AO ASIF Principles in Spine Surgery. Berlin: Springer-Verlag.

2. Aebi M, Arlet V, Webb JK (2007). AOSPINE Manual (2 vols), Stuttgart, New York: Thieme.

3. Modular Stabilization System: The Universal Spine System, in Aebi M, Thalgott JS, Webb JK (1998) AO ASIF Principles in Spine Surgery. Springer Berlin, Heidelberg. This chapter provides additional background and details on the USS system (only side-opening systems are covered in this chapter).

Synthes GmbH
Eimattstrasse 3
4436 Oberdorf
Switzerland
Tel: +41 61 965 61 11

www.jnjmedicaldevices.com

Not all products are currently available in all markets.

This publication is not intended for distribution in the USA.

Surgical techniques are available as PDF files at
www.depuysynthes.com/ifu