Modular Access and Retractor System

SynFrame® RL and SynFrame®

Surgical Technique

DePuy Synthes

PART OF THE Johnson & Johnson FAMILY OF COMPANIES

Image intensifier control

This description alone does not provide sufficient background for direct use of DePuy Synthes products. Instruction by a surgeon experienced in handling these products is highly recommended.

Processing, Reprocessing, Care and Maintenance
For general guidelines, function control and dismantling of multi-part instruments, as well as processing guidelines for implants, please contact your local sales representative or refer to:
http://emea.depuysynthes.com/hcp/reprocessing-care-maintenance
For general information about reprocessing, care and maintenance of Synthes reusable devices, instrument trays and cases, as well as processing of Synthes non-sterile implants, please consult the Important Information leaflet (SE_023827) or refer to:
http://emea.depuysynthes.com/hcp/reprocessing-care-maintenance

Contents

*For Product Catalog contact your local DePuy Synthes representative.

Introduction

The SynFrame family is composed of several modules, allowing for various configurations. In addition to the Stainless Steel blades (SST), blades made out of radiolucent aluminium alloy (Al) are also available. Semi-transparent bone levers made out of Titanium Alloy (TAV) complete the system.

Features:

- Exposure in the depth of the operating field by distal expansion of the retraction.
- Illumination by means of the poly-axial holder for optics and endoscope.
- System attaches to both sides of the operating table.
- Traction forces can be adjusted by individual adjustment of each retractor.

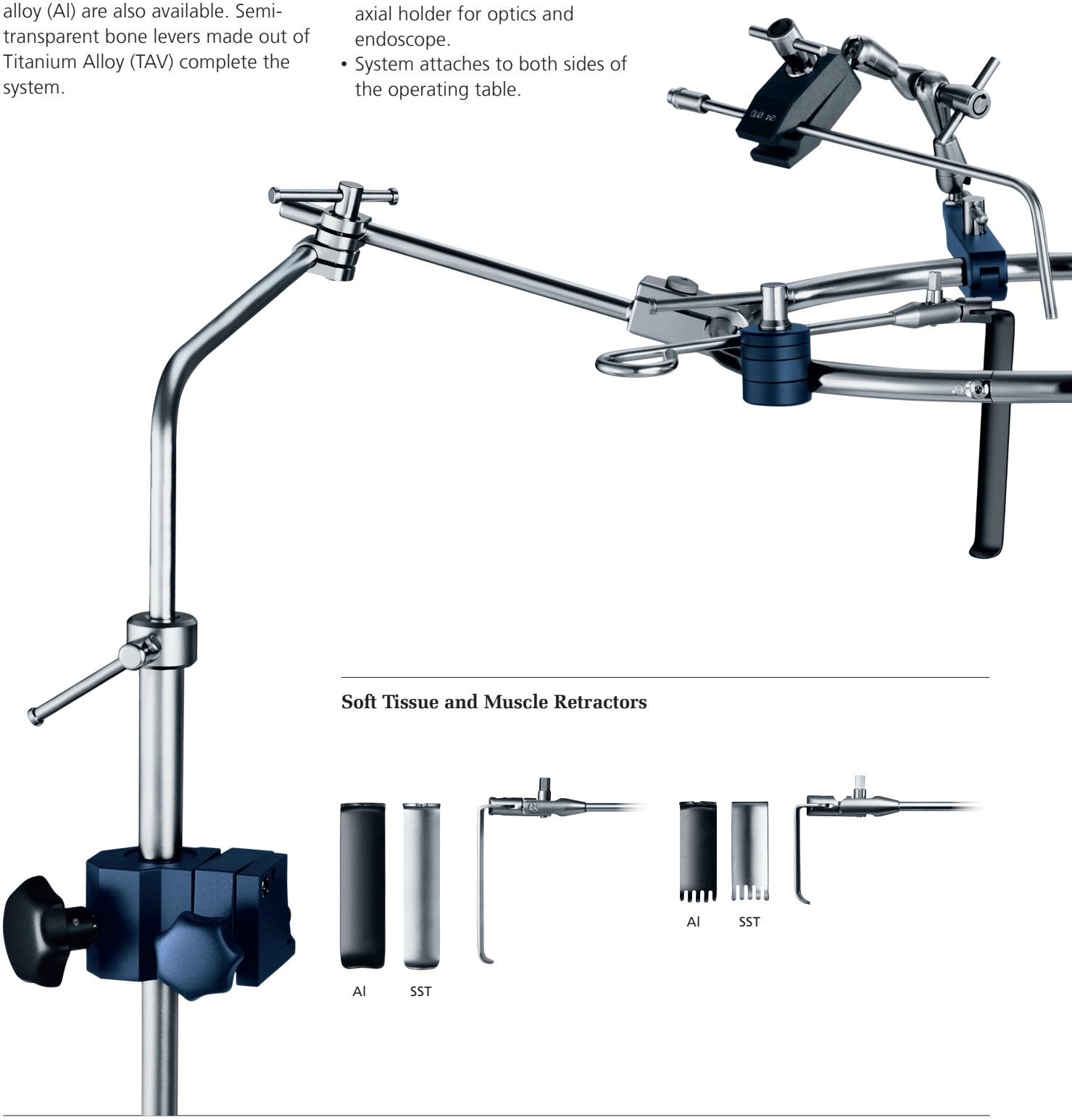

Soft Tissue and Muscle Retractors

Broad range of applications

- All retractors can be combined
- Different lumbar approaches (anterior, lateral, posterior)
- Anterior cervical approach

Bone Levers

TAV SST

Rib Retractors

SST

Holder for Optics

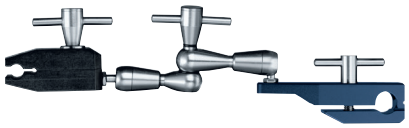

Light-transmitting Rod

AO Spine Principles

The four principles to be considered as the foundation for proper spine patient management underpin the design and delivery of the Curriculum: Stability – Alignment – Biology – Function.[1,2]

Stability
Stabilization to achieve a specific therapeutic outcome

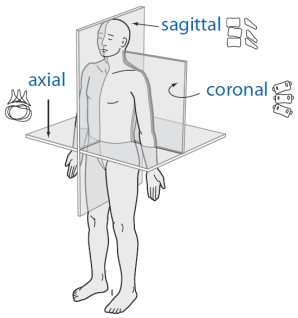

Alignment
Balancing the spine in three dimensions

Biology
Etiology, pathogenesis, neural protection, and tissue healing

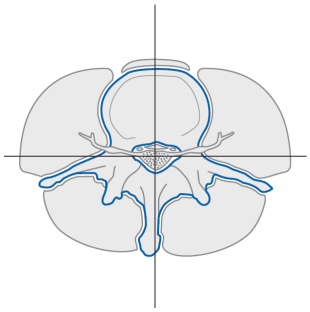

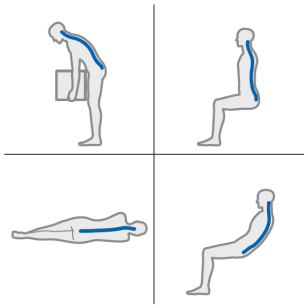

Function
Preservations and restoration of function to prevent disability

[1] Aebi et al (1998)
[2] Aebi et al (2007)

Mounting the Basic System

SynFrame is a surgical approach and retraction system and consists of a basic system (basic construction) and different modules.

The illustrations for the assembly technique of the SynFrame basic system will be described with reference to a supine patient (anterior lumbar approach in this case).

In other patient positions, the SynFrame basic system is always constructed in the same sequence following the same principles. Assembly on the operating table and over the surgical approach needs to be adapted to the patient position.

Sterile assembly of SynFrame

To separate the sterile area from the unsterile area on the operating table, sterile cover tubing or a corresponding cover with special fenestrated drapes is recommended.

Since the insulated holding base (387.346) can be sterilized, it can also be used in the covered area (for example over the sterile cover).

Precaution: **During assembly, check if the holding base is firmly affixed to the guide rails of the operating table and does not move. The clamping mechanism for the holding base can damage special cover materials (such as Goretex) in certain circumstances.**

1. Mount the holding base

Tightly screw an insulated holding base (387.346) to the guide rails, diagonally to each other.

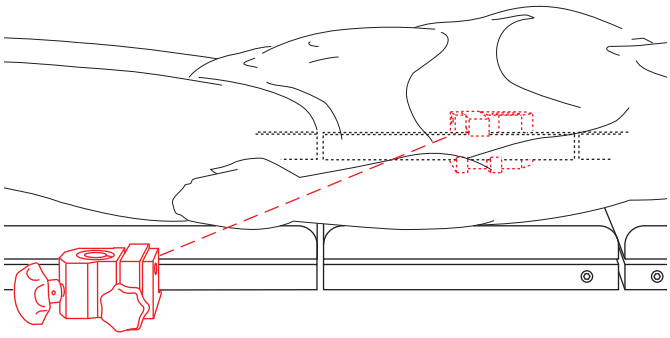

Offset the insulated holding base to the side so that:

a. The retaining ring Ø 300 mm (387.336) can be affixed cranially and caudally between the holding base on the operating table (required space: at least 400 mm),
b. The retaining ring can be positioned laterally and cranially or caudally between the angled rods (387.344) held in the holding bases depending on the planned surgery,
c. The freedom of movement and the work area of the surgeon and assistants are not restricted.

If this construction is not possible due to the patient's position, the approach or the design of the operating table, always assemble the basic system so that the retaining ring in particular is held securely.

Note: **The SynFrame holding base for the operating table insulates the entire SynFrame system from the grounded operating table. Damaged holding bases may not be used.**

2. Insert the guiding tubes into the holding base

Insert both guiding tubes (387.343) into the holding bases at the same height in relation to the positioned patient, and clamp them with the clamp (1).

The outer diameter of the bottom part of the guiding tube mates with the guide of the holding bases. The larger outer diameter of the top part of the guiding tube acts as a stop so that the tightening bar (2) of the guiding tube does not touch the metal parts of the operating table or the insulated parts of the holding base which would eliminate the effects of the insulation.

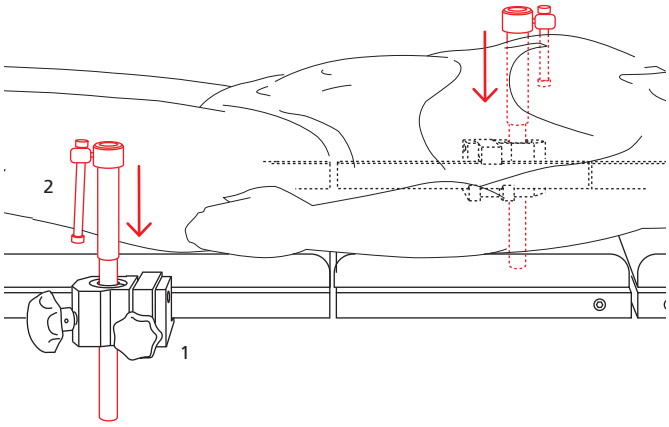

3. Fix the angled rods in the guiding tubes

Insert the angled rods (387.344) into the guiding tubes on both sides of the operating table, and affix them approximately 5–10 cm from the patient.

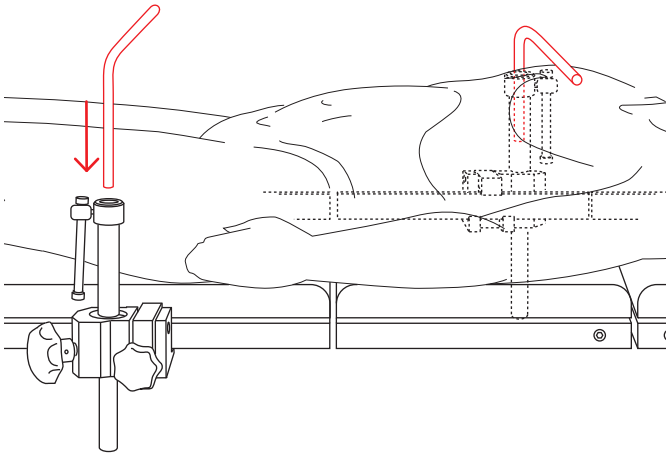

4. Affix tube-to-tube clamps on the angled rods

Loosely insert the tube-to-tube clamps (387.353) onto the two angled rods.

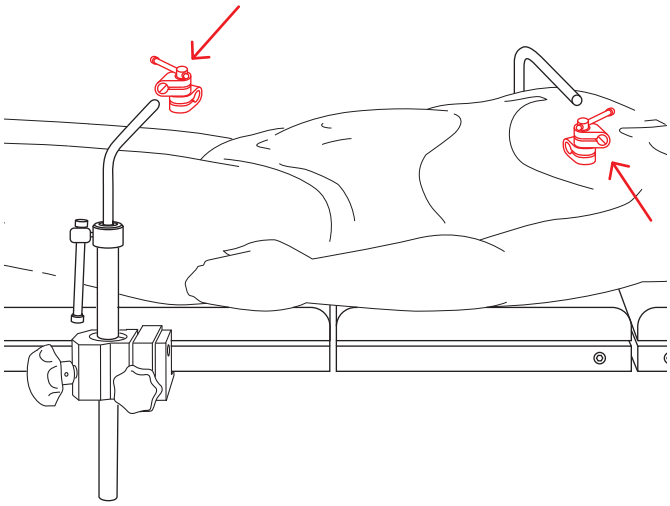

5. Mount retaining ring

The retaining ring (387.336) consists of the two half-rings (387.337). To mount the retaining ring, insert the two half-rings over the guide pins. Tighten the side set screws with the large hexagonal screwdriver (314.270).

Precaution: **The set screws are designed to be loosened but not to be removed from the rings. Removal of the set screws may cause damage to the set screws (Disassembly and Assembly Instructions SE_719629).**

Alternative

Mount the retaining ring with an extension

The round retaining ring Ø 300 mm can be enlarged to form an oval retaining ring 400 mm long. Insert the extensions (387.338) over the guide pins onto the half rings on both sides, and tighten them with the large hexagonal screwdriver.

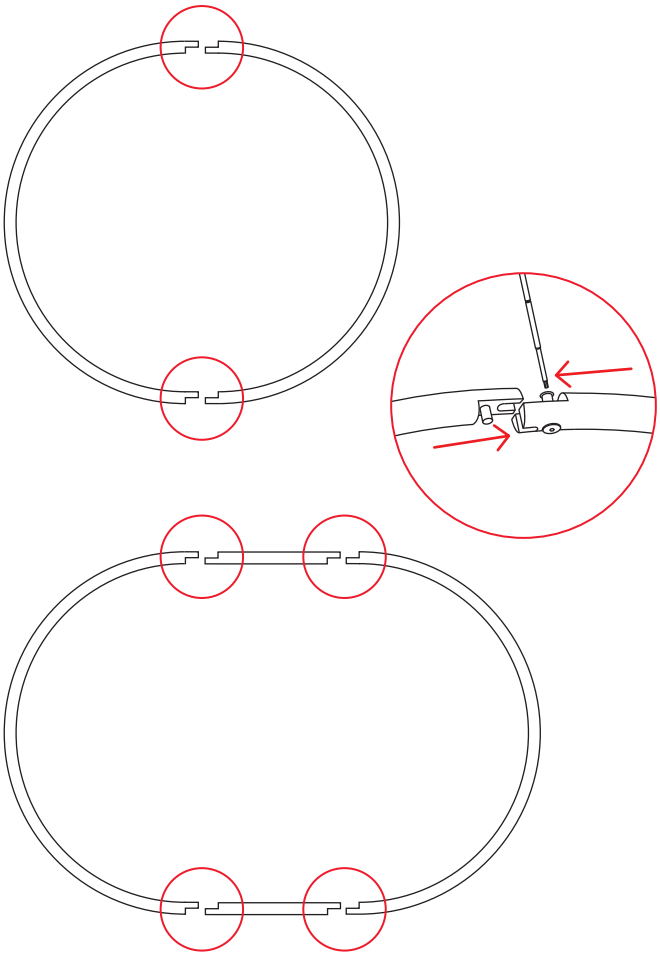

6. Mount the connection rods on the retaining ring

Open the clamps of the two connecting rods (387.345). Insert the retaining ring into the two clamps, and screw on the clamps with the large hexagonal screwdriver so that the connecting rods can still freely slide on the retaining ring. The retaining ring can thereby be adapted to the placement of the positioned patient.

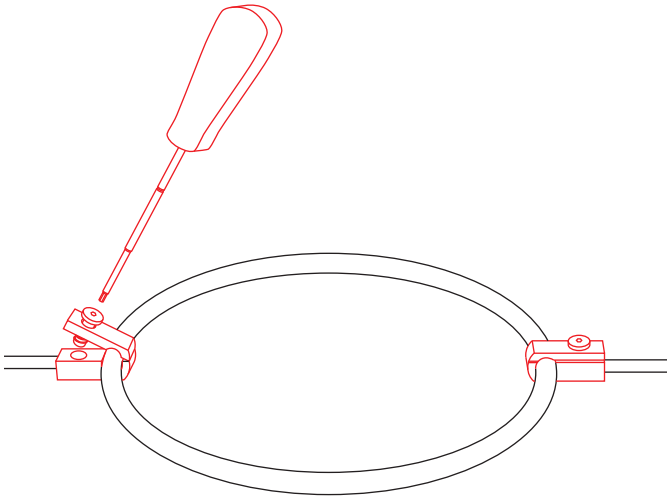

7. Affix the retaining ring over the patient

Insert the retaining ring with the connecting rods into the tube-to-tube clamps on both sides, and affix it over the operative field.

Move the retaining ring as close as possible to the operative field so that the distance between the instruments later placed on the retaining ring and the operative field is as small as possible. If necessary, lower the angled rods further into the guiding tube.

Adjust the position, and tighten the tube-to-tube clamps (1) and screws in the clamps of the connecting rods (2). Check the stability of the connecting elements to prevent undesirable movement during surgery.

Warning: Do not lean against the basic SynFrame system. This could overload the construction, move individual parts of the SynFrame, and displace soft tissue and/or blood vessels. When moving the patient, monitor the position of the instruments in situ to avoid potential harm or dislocation of soft tissue and/or vessels.

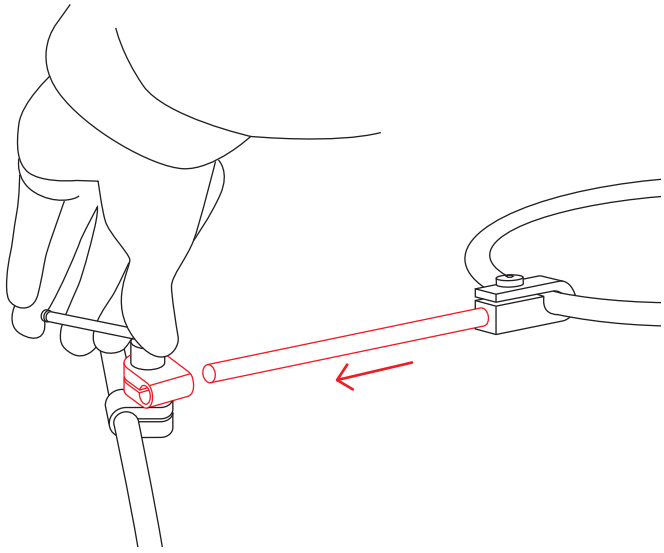

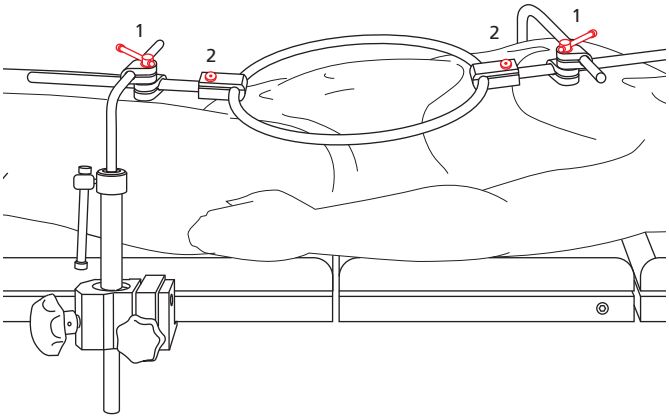

Alternative way to mount the basic system

The sequence of the steps can also be varied as follows:

1. First affix the connecting rods to the tube-to-tube clamps.
2. Then insert the mounted retaining ring into the opening of the connecting rods.

(see steps 5–7)

8. Mount the clamp on the retaining ring

The clamps (387.347) serve as a holder for the different SynFrame instruments on the retaining ring. They are construction elements of the basic system.

Check if the clamp is completely open before snapping it on. Snap the clamp with the larger of the two slotted openings onto the retaining ring without tightening it. Make sure that the clamp is affixed from the outside since the holding force of the clamp is greatest there given its construction.

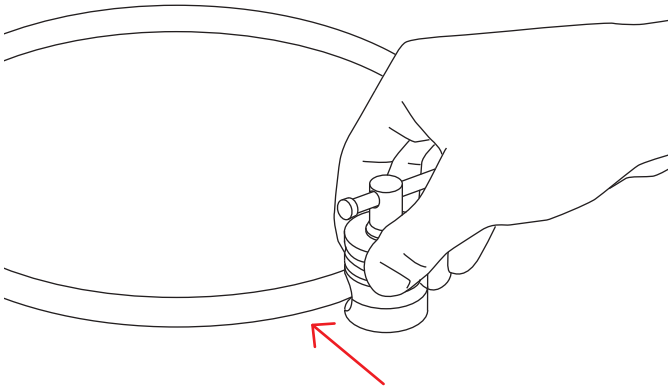

Mounting Soft Tissue Retractors/Muscle Retractors

Soft tissue retractors are for retraction of soft tissues and blood vessels. Muscle retractors are for retraction of muscles of the subcutaneous tissues and the skin.

1. Insert the retractor in the guide rod

From the side, insert the selected retractor into the adjustable clamp of the guide rod (387.358) and rotate it 90° in the retaining ring. This holds the retractor in the guide, but the retractor remains fully movable.

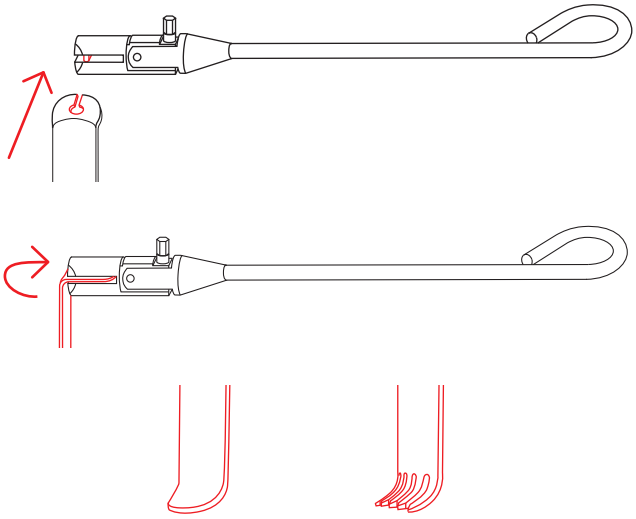

Soft tissue retractor Muscle retractor

2. Position the retractor

Position the retractor in the operative site, and clamp the guide rod of the retractor in the smaller slotted opening of the clamp. Make sure that the clamp is completely opened. The retractor is freely moveable on the retaining ring in every plane as long as the clamp is not screwed tight.

After the retractor is definitively positioned, stably affix the clamp by screwing tight.

Precaution: **The retractors can apply a relatively large force to the soft tissue and vessels. For this reason, loosen the retractors from time to time to prevent pressure necrosis.**

Warning:
- **Always align the retractor directly with the direction of pull of the guide rod so that the entire width of the retractor serves as a seat for the soft tissue (a).**
- **The pointed edge of the retractor may never contact the soft tissue (b); this can cause pressure necrosis and cause burns if it unintentionally contacts the coagulation device.**

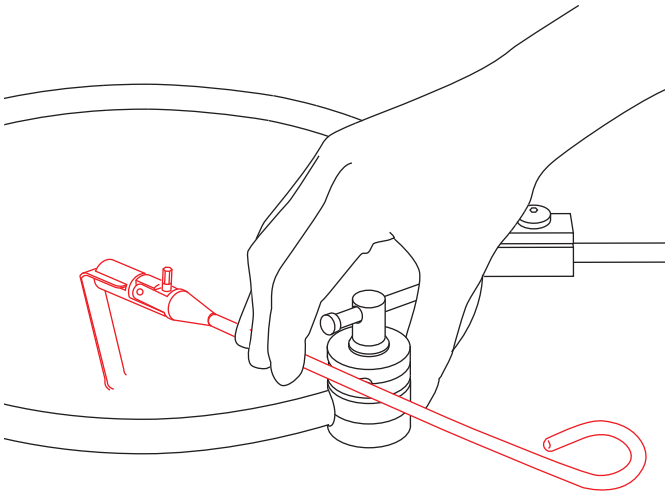

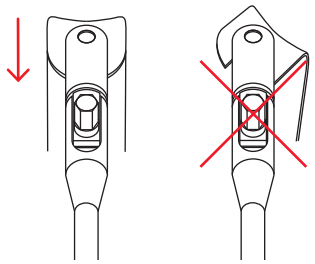

a b

3. Enlarging the work area

Loosen the setscrew in the adjustable clamp of the guide rod with socket wrench 6.0 mm (388.140). The adjustable tip of the affixed retractor can then be pivoted on its axis, and the visible working area can be enlarged.

Warning: **If the socket wrench is used as a lever, there is a danger of too much force being transmitted to the retractor. This can damage the retracted structures (overstretching the vessels and soft tissue). It is therefore recommendable to guide the moveable retractor with your finger. The tension can be adjusted and distributed safely for soft tissue.**

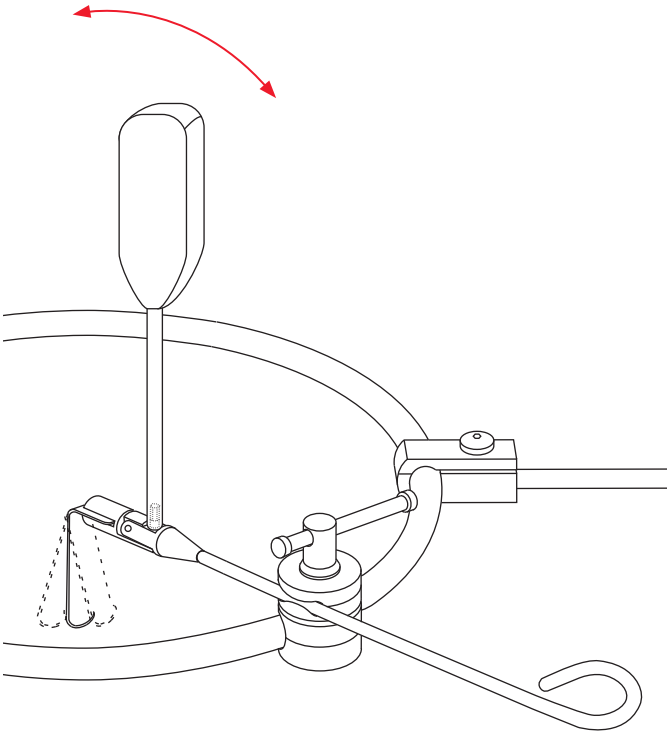

4. Retraction

For retraction, release the clamps until the guide rod can be moved. Carefully pull the guide rod and the retractor until the desired retraction is achieved. Then screw the clamp tight in this position.

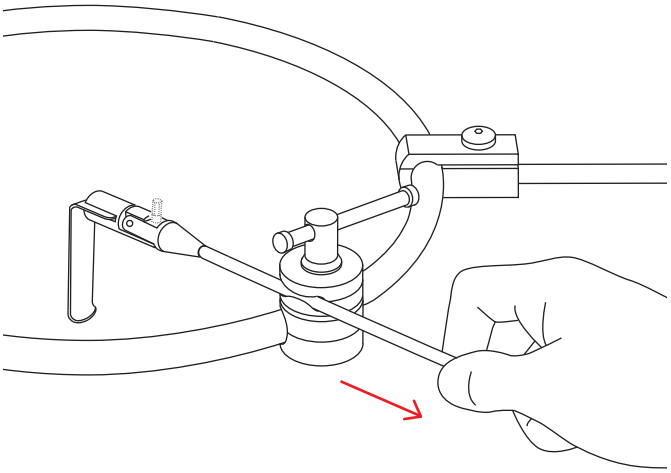

Mounting Bone Levers

For retracting soft tissue, blood vessels and muscular structures.

1. Anchor the bone lever in the bone

Position and anchor the bone lever in the bone with the aid of a hammer.

Warning: **Carefully insert the bone lever into the operative site and hammer it in under visual observation. The sharp tip can cause tissue damage.**

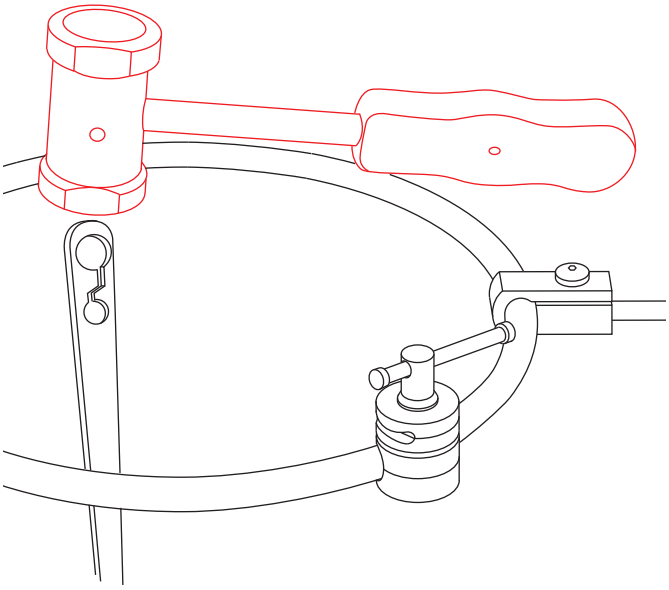

2. Affix the bone lever to the holder

Enlarge the operative site by pulling back the bone lever, and hang the lever over the ball of the holder (387.356). Patient movement can be compensated by the ball joint and the flexible end of the holder.

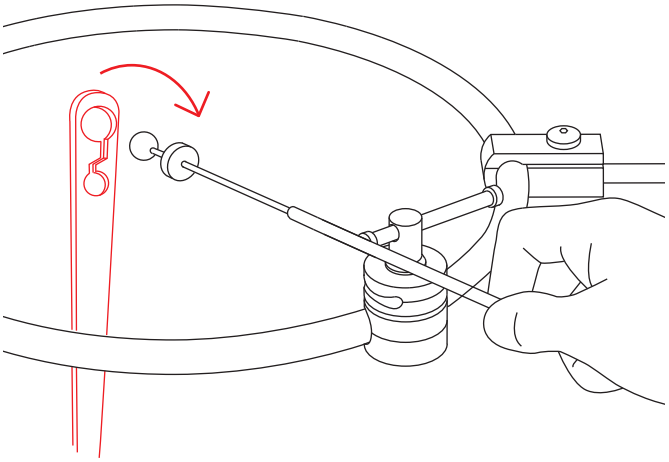

3. Clamp the bone lever holder in the clamp

Clamp the bone lever holder in the smaller slotted opening of the clamp. As long as the clamp is not screwed tight, the holder for the bone lever can still be freely moved.

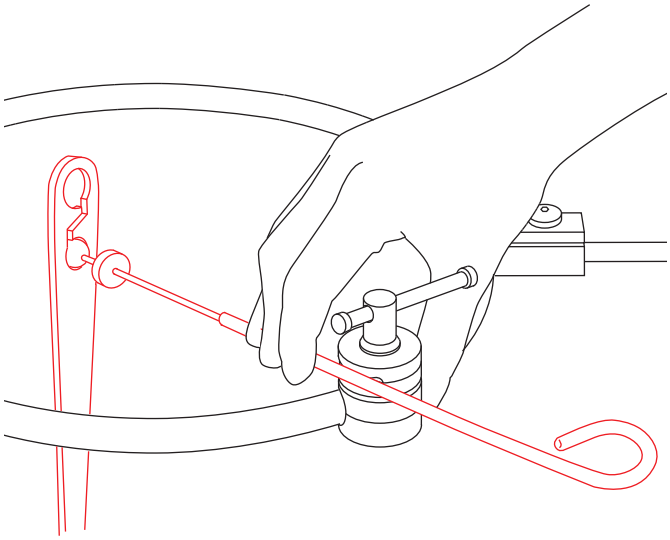

4. Retraction

Carefully pull the holder for the bone lever in the not-fully-tightened clamp together with the retractor until the desired retraction is achieved. Then screw the clamp tight in this position.

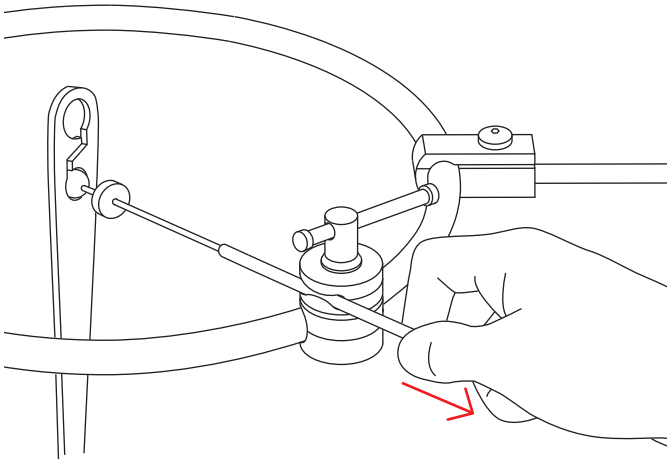

Mounting Rib Retractors

For retracting ribs for a thoracic approach.

1. Position the rib retractor

Place the rib retractor into the desired position.

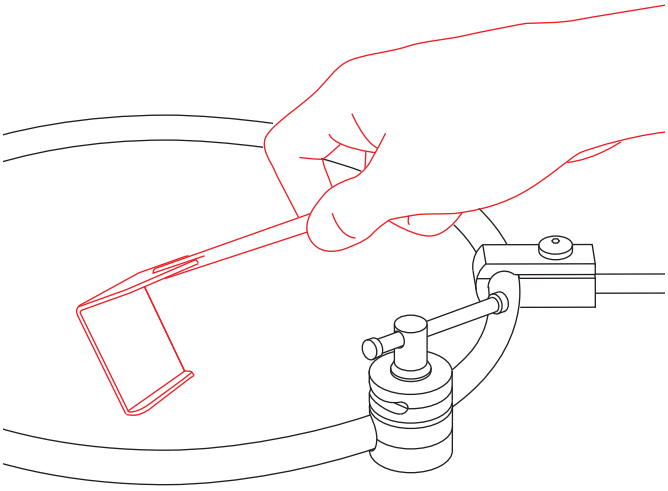

2. Clamp the rib retractor in the clamp

Clamp the rib retractor in the smaller slotted opening of the clamp. As long as the clamp is not screwed tight, the rib retractor can still be freely moved.

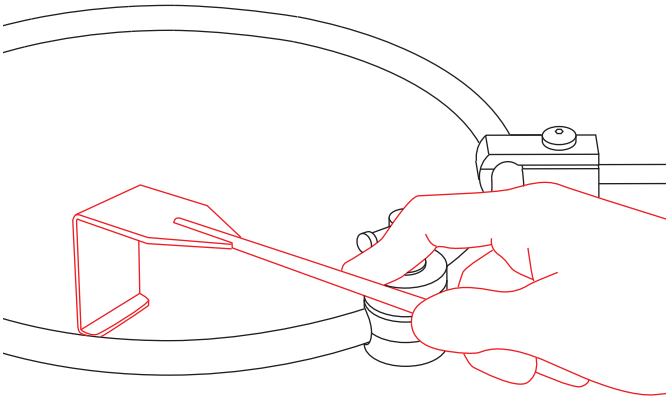

3. Retraction

Carefully pull the rib retractor in the not-fully-tightened clamp until the desired retraction is achieved. Then screw the clamp tight in this position.

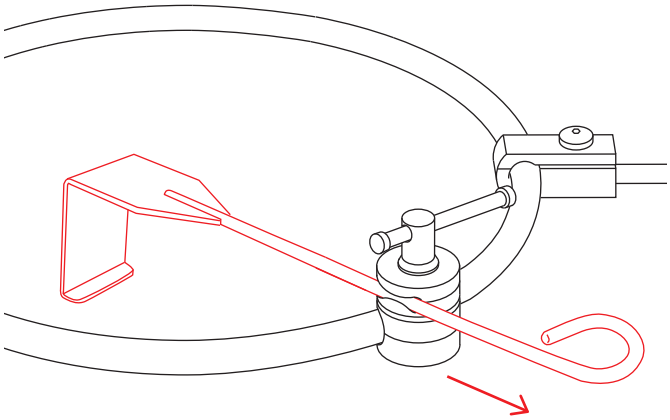

Mounting Light-transmitting Rod and Optics Holder

Mount the light-transmitting rod

The light-transmitting rod (387.362) is equipped with an ACM connection. Use the required adapter (Storz or Wolf) depending on the available fiber-optic cable system.

Following the same procedure as with the guide rods for retractors, clamp the light-transmitting rod in the small slotted opening of the clamp.

As with the guide rods, it is recommended to position the light-transmitting rod so that the working area is directly illuminated deep in the operative site without hindering surgery.

Stably fix the light-transmitting rod on the frame by tightening the clamp.

Warning: Together with the high-power light sources, temperatures can arise at the light-source end and instrument end of the light-transmitting rod that can cause burns. In addition, high-energy light can increase the tissue temperature. For this reason, avoid direct contact with tissue, and maintain a distance between the tissue and distal end of the rod of at least 10 mm when affixing the SynFrame light-transmitting rod. Do not place the light-transmitting rod on flammable objects such as textiles (surgical drapes). Never look into the end of the connected light-transmitting rod (blinding hazard).

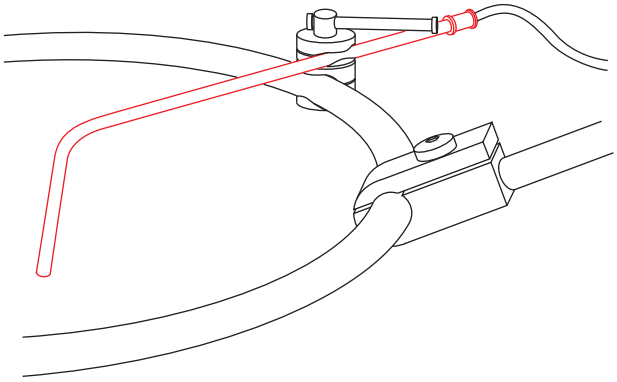

Mount the optics holder

Tighten the set screw to affix the holder for optics (387.365) facing outward on the ring so that the operative field remains free. Fix the polyaxial mechanism of the optics holder in the desired position using the central adjusting screw.

The optics holder is designed for optics with a diameter of 4 mm or 10 mm.

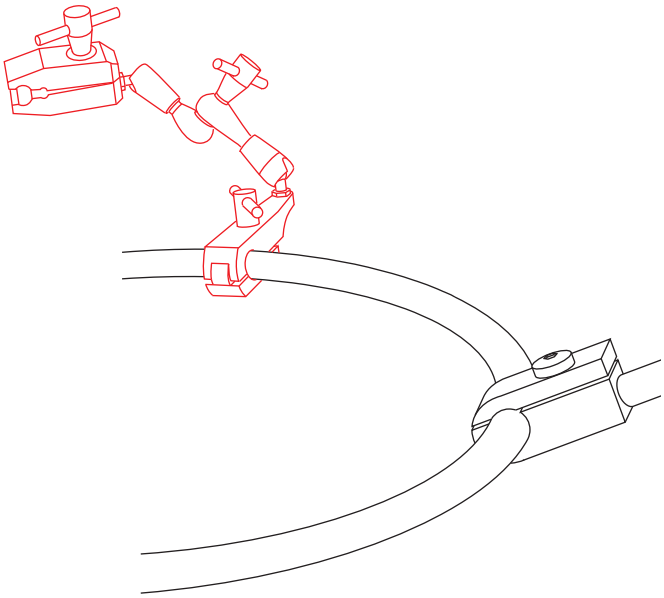

Removal

Remove SynFrame

SynFrame is removed in reverse sequence. The entire construction (retaining ring and connecting rods) above the patient can be quickly removed from the operative area by completely screwing out from the clamp the locking screws of the tube-to-tube clamps (387.353) on the angled rods.

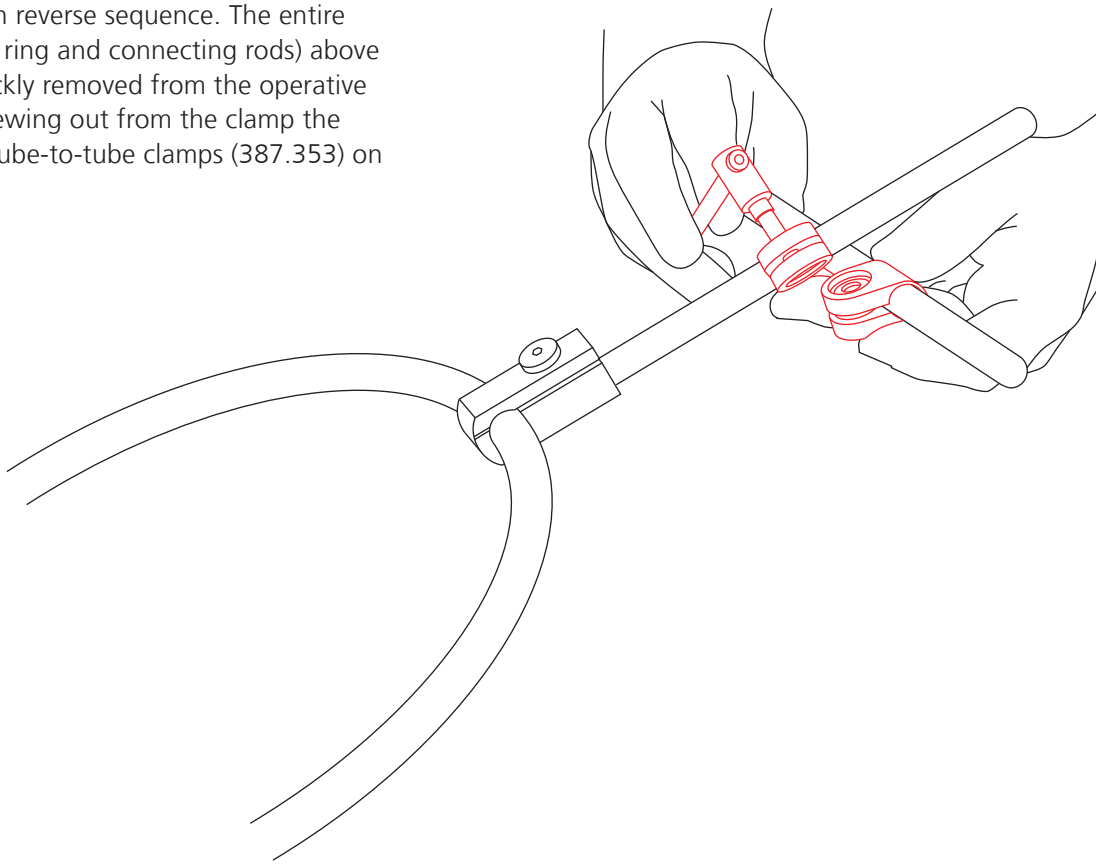

Using SynFrame with devices from other manufacturers

Precaution: **If SynFrame is used with high-frequency or electromedical surgical equipment, make sure that this equipment does not contact the metal parts of the SynFrame. The SynFrame manufacturer refers to the guidelines and instructions associated with the high-frequency or electromedical surgical device manufacturers but also recommends the use of insulating and grounding techniques.**

1

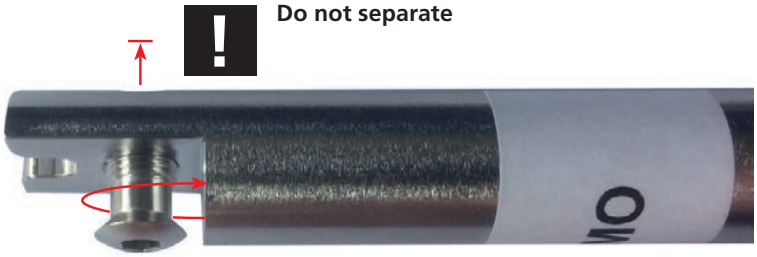

2

Bibliography

1. Aebi M, Thalgott JS, Webb JK (1998): AO ASIF Principles in Spine Surgery. Berlin: Springer.

2. Aebi M, Arlet V, Webb JK (2007): AOSpine Manual Principles and Techniques (Vol. 1), Stuttgart, New York: Thieme

Synthes GmbH
Eimattstrasse 3
4436 Oberdorf
Switzerland
Tel: +41 61 965 61 11
www.jnjmedicaldevices.com

Not all products are currently available in all markets.

This publication is not intended for distribution in the USA.

Surgical techniques are available as PDF files at
www.depuysynthes.com/ifu